HYDREX
WATER & WASTE TREATMENT

Bullentin No. 216-02-R2

BIOROTOR
ROTATING BIOLOGICAL CONTACTOR

* Low Energy Consumption
* Simple Construction
* Highly Efficient
* Simple Operation
* Low Maintenance
* Low Operating Cost
* Highly Reliable
* Economical Design
* Low Space Requirement
* Large Contact Surface
* High Biomass Content
* Controlled Biomass Growth
* Compact
* Non-Clogging

PROCESS DESCRIPTION

The BIOROTOR is a biological treatment process for oxidizing organics pollutants in wastewater. It consists of a large diameter contact media attached to a central shaft rotating slowly in a wastewater basin. The media is only partially submerged. As the contactor rotate, the media is alternately submerged in the wastewater then exposed to air. This rotating action provides for the aeration of the wastewater while creating the necessary turbulence to mix the basin content to prevent the solids from settling out. The bacteria naturally present in the wastewater grow quickly as they adhere to the media surface. Within 2-3 weeks after initial start-up the entire surface will be covered with 2-4mm of active bacteria growth called biomass. The high concentration of bacteria in the biomass provides for a high degree of purification at a relatively short retention time.

Excess biomass continuously sloughs off from the media due to the shearing force exerted on the media passing through the wastewater. This prevents the clogging of the media, result in flocculation of suspended particles and provides for controlled and continuous growth of active biomass.

THE BIOROTOR media provides:

- a large surface area for the development of biological culture,
- intimate contact of the biological growth with the wastewater,
- efficient aeration of the wastewater,'
- positive means of continuously stripping excess biomass, and
- agitation of the missed liquor in the basin to keep sloughed solids in suspension

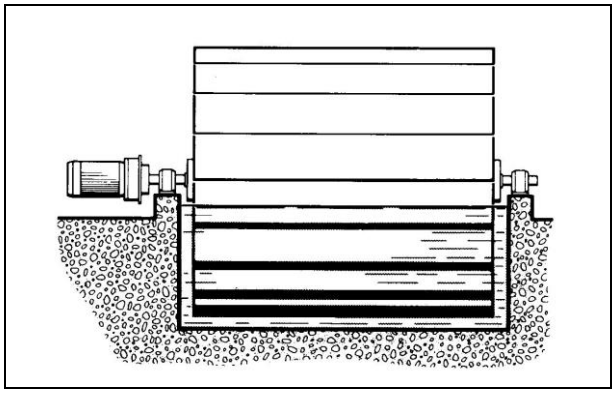

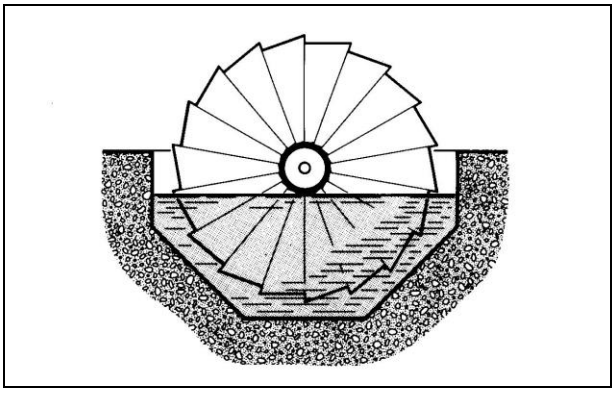

SYSTEM DESIGN

To design a BIOROTOR plant it is necessary to determine the total surface area necessary to achieve the required degree of treatment. Important considerations are: type of wastewater, organics concentration, flow rate, flow pattern, pH, temperature, climatic conditions and type of pre-treatment.

Other factors that must be considered when designing a BIOROTOR system are density of media, arrangement of media, hydraulic loading, and rotational velocity.

It is not simply a question of putting as much surface area into the contactor as possible. There is an optimum ratio between the surface area and the media volume for the type of wastewater being treated. It is important that there is no short circuiting and the entire surface area comes into contact with air, the wastewater and microorganism on every revolution. Not only can clogging occur if the media is too dense, but corrugation made to increase the surface area may be bridged, significantly reducing the available area.

The arrangement of media in a series of stages increases treatment efficiency significantly. Each stage operates as a completely mixed unit in which the rate of biological growth and the rate of stripping excess biomass are at equilibrium. As the wastewater pass from stage to stage, it undergoes a progressively increase degree of treatment by specific biological culture in each stage. Generally the size of each stage is based on the influent BOD to that stage – the later stages being smaller than the preceding ones. The starting can be arranged both in small plant by installing the media on one shaft in several stages or in a large plant by using each shaft as a single stage and operating the shafts in series.

For treatment of municipal sewage, an accurate system design can be made by referring to charts and curves similar to those shown below.

For industrial wastewater, however, generalized design figure are not available. Not only is the type of industry important, but even within the same industry large variations occur in wastewater quality from one plant to another depending on the type of process, raw material used, water recycling employed, climatic conditions, flow patterns, etc. There can also be significant differences in treatability factors of the wastewater. Based on past experience it is possible to estimate fairly closely the design conditions, but to obtain exact figures pilot tests are necessary.

– In each case all important parameters must be considered and Hydrex technical staff are available to assist in collecting the necessary data.

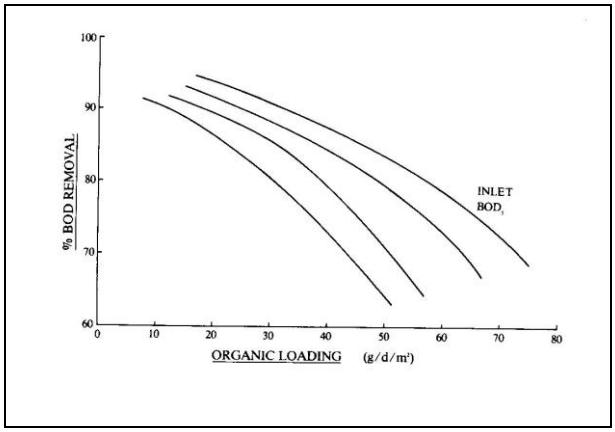

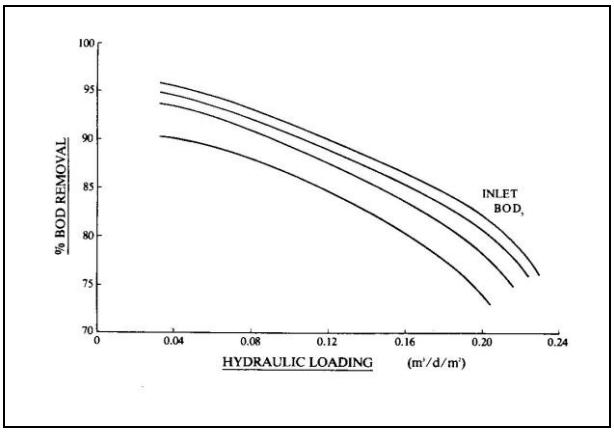

CONSTRUCTION

The BIOROTOR is designed on the basis of the well proven RBC process that first became commercially available in Europe. It optimizes mechanical design and contact media structure to provides an economical, simple compact, reliable and energy efficient system with high structural strength.

The shaft design and media supports are the two prime considerations for achieving mechanical integrity

Non-uniform growth of the biomass on the media results in unbalanced loads on the shaft. To achieve maximum integrity in shaft strength, a circular seamless shaft of high tensile strength is used to withstand the high loads developed and avoid inherent problems that exist with welded square shafts.

The support of the media and attachment to the shaft are equally important. The synthetic media cannot withstand the torque, bending and shearing forces developed during rotation, unless properly for highly reliable system as evidenced by the large number of units operating trouble free since start-up.

The contact media is selected to meet several critical: structural strength, non-clogging, large surface area to volume ratio and high void ratio. The media are similar to those used in tricking filters. They consist of high structural strength corrugated and flat PVC sheets bonded together to provide open, crossflow structures for intimate contact between air, substrate and microorganisms. The structure is designed to give maximum surface area per unit of volume yet prevent clogging, short circuiting of water while still providing a turbulent flow.

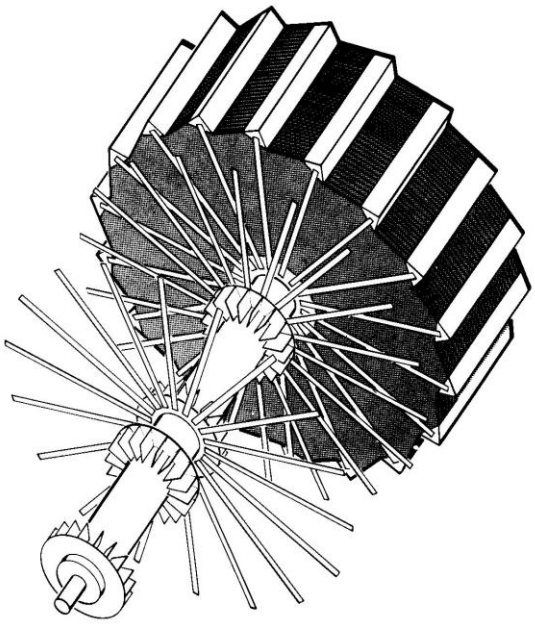

Segmental media bundles placed as pie-shaped wedges about the shaft circumference are use in BIOROTORS. This allows installation of the media at the job site, thereby substantially reducing freight and handling charges, as well as ease of repairing or replacing a segment of the media if necessary.

TREATMENT PLANT

A treatment plant incorporating a BIOROTOR generally includes preliminary treatment, primary clarifier, the contactor, final clarifier and post treatment facilities.

The raw wastewater is passed through the preliminary treatment – bar screen, grit chamfer, comminutor – and a primary clarifier to remove coarse and settleable solids and floatable material.

The pretreated wastewater flows then to a single or multistage BIOROTOR where the organic matter is partly oxidized to water and carbon dioxide and partly transformed into biomass. Excess biomass continuously sloughs off from the contactor media and, together with flocculated suspended solids in the reactor basin, forms a fact settling waste sludge.

The biologically treated wastewater is then sent to the final clarifier where suspended materials are separated from the treated liquid.

Depending on the local regulations the clarified effluent could be chlorinated prior to discharge to destroy any pathogenic bacteria that may be present in the wastewater.

The sludge in the final clarifier is ready thickened to over 2%. If it is recycled to the primary clarifier a mixed sludge with a solids concentration of up to 4% may be obtained.

Depending on the loading selected and the degree of purification desired, nitrification could take place in the later stages of the BIOROTOR. At standard design loads for municipal sewage treatment up to 90-95% nitrification is generally obtained

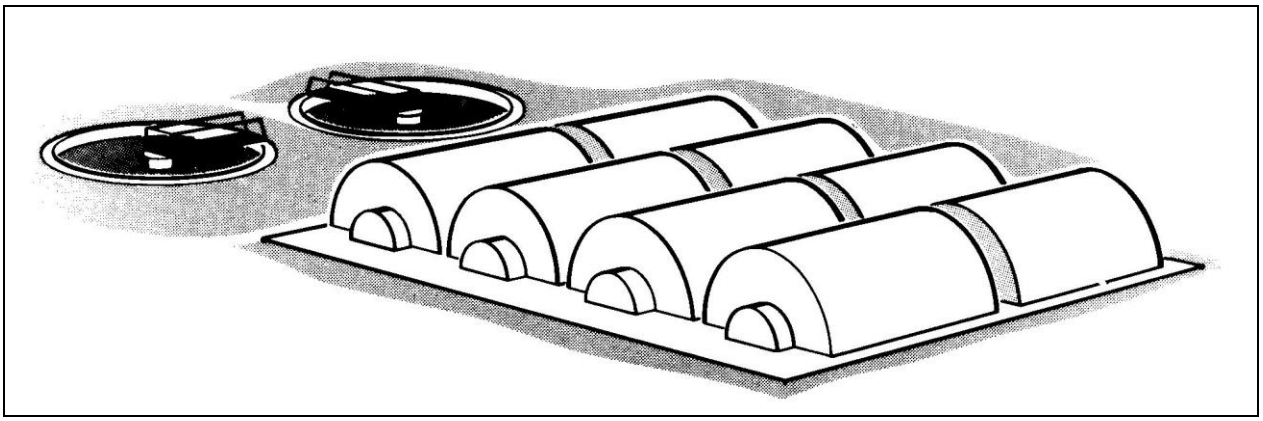

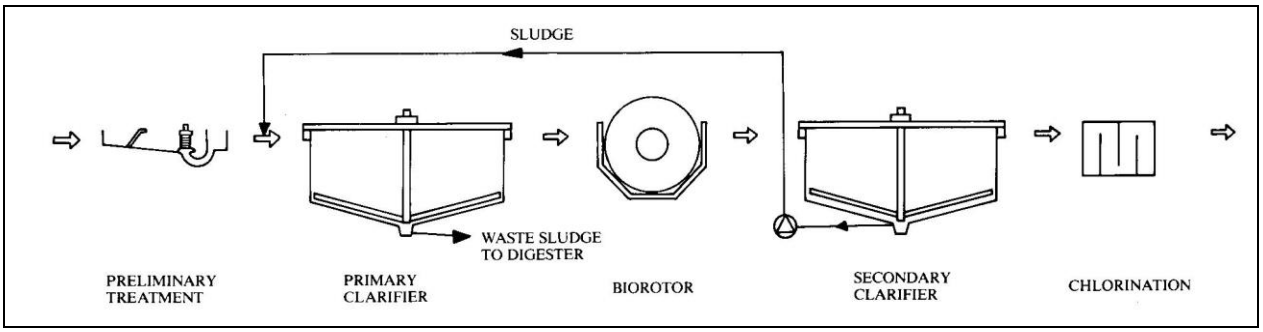

TWO STAGE TREATMENT SYSTEMS

In a two stage treatment system the wastewater is treated first by a BIOROTOR and then by an activated sludge process. The overriding concept behind the two stage system is to take advantage the strength inherent in both processes. The result is a treatment plant that can be more effective than either of the two systems individually.

The BIOROTOR is very stable in operation, resistance to shock loadings, able to oxidize a significant fraction of large BOD load, relatively easy to operate and maintain, and inexpensive for partial (roughing) treatment with minimum power consumption.

Comparably, the strength of activated sludge process is its ability to produce a high quantity effluent and, when extended aeration is used, a minimal excess sludge.

The combination of these two processes results in a system that is able to achieve very high levels of performance with high strength wastes (such as industrial waste) and varying influent conditions, often at a cost less than a single stage process.

While a two stage treatment system could be operated in several combinations, there are two design concepts that have been proven successful for obtaining high quantity effluent:

1 - Treating a week to moderate strength waste by Biorotor to remove 50 to 70 percent of the soluble BOD and producing and effluent that is easily polished by activated sludge to an effluent of 10 to 20 mg/1 BOD without filtration in spite of widely varying waste strengths and flows.
2 - Treating a high strength waste (greater than 400 mg/l BOD) to achieve an effluent quality in the range of 150 to 250 mg/l. In this instance the Biorotor acts as a roughing unit for partial organic removal and polishing is done in the activated sludge process.

In summary, the combination of Biorotor and activated sludge systems can maximize the advantage of each while minimizing many of the disadvantages.

Two stage Biological plant at Coca-Cola, Philippines.

HYDREX
WATER & WASTE TREATMENT

Six Biorotors installed at Hau Guang Brewery in Shanghai.

Six Biorotors installed at Hau Guang Brewery in Shanghai.

Two Biorotors installed in a Coca-Cola plant in the Philippines.

FOR FURTHER INFORMATION

A full range of water and wastewater treatment systems and equipment are available from Hydrex. For further information, please contact us or our authorized agent.

Authorized Agent:

HYDREX ASIA LTD.

701, BEVERLEY COMMERCIAL CENTRE,
87-105 CHATHAM ROAD, KLN, HONG KONG.
PHONE: (852) 2527-9544
E-mail: info@hydrexasia.com www.hydrexasia.com